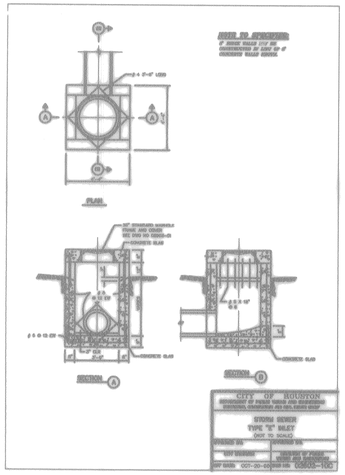

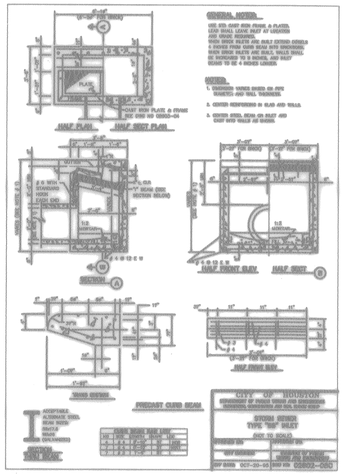

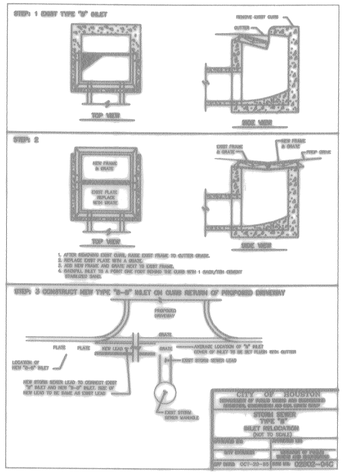

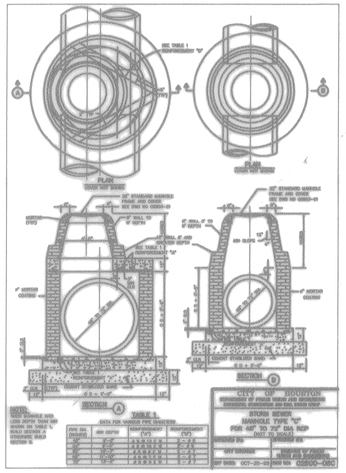

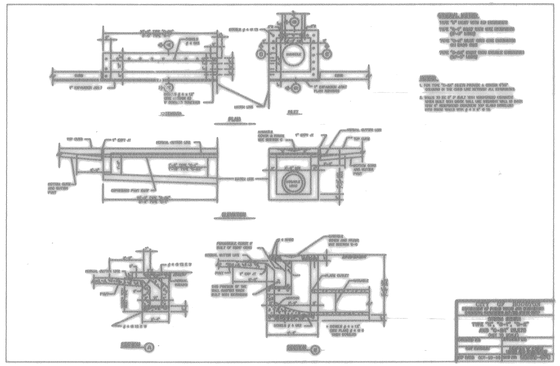

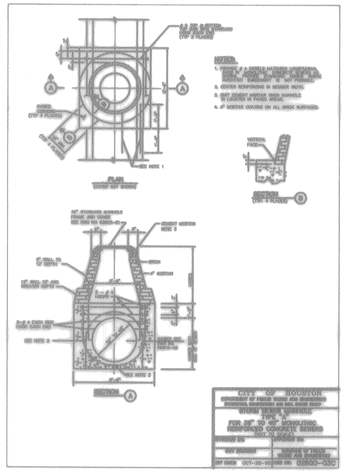

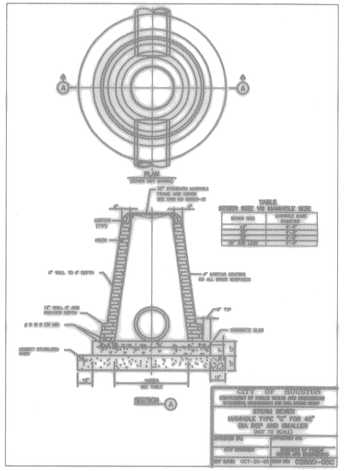

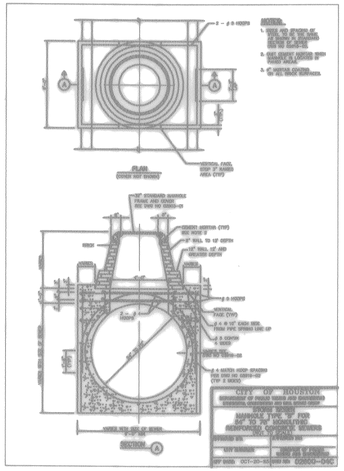

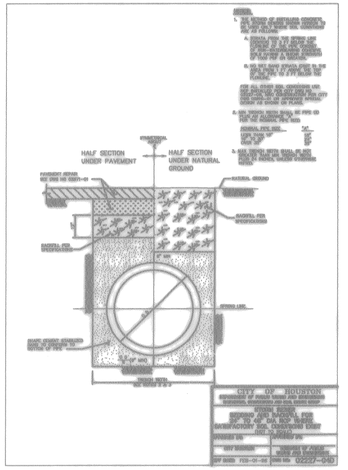

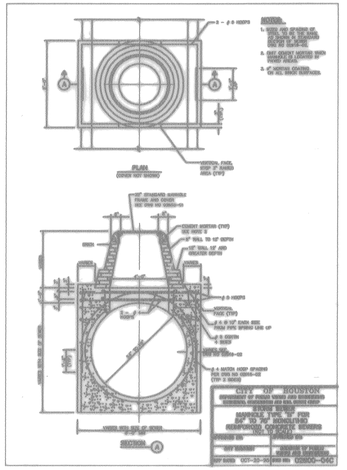

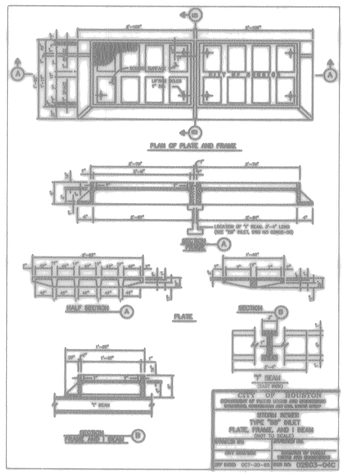

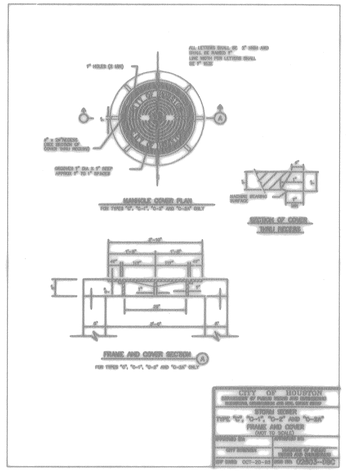

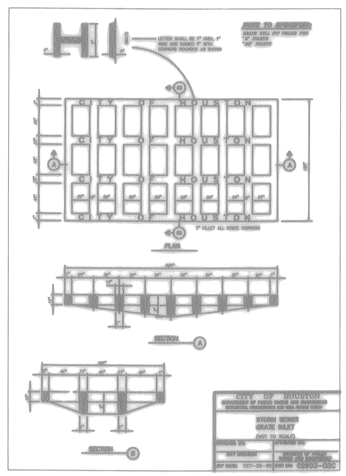

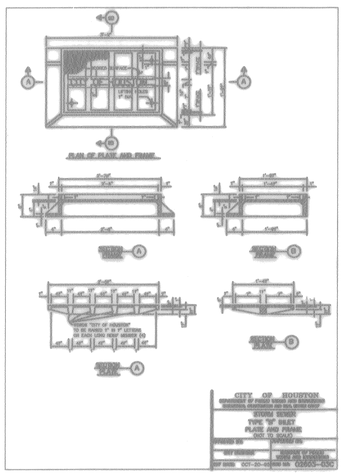

CITY OF HOUSTON
DEPARTMENT OF PUBLIC WORKS & ENGINEERING
ENGINEERING, CONSTRUCTION AND REAL ESTATE GROUP

SECTION APPROVALS

WATER ENGINEERING	TRAFFIC AND SIGNAL ENGINEERING
WASTEWATER ENGINEERING	STREET, BRIDGE AND RIGHT-OF-WAY ENGINEERING
STORM SEWER ENGINEERING	CONSTRUCTION

OTHER DEPARTMENTS

PLANNING AND DEVELOPMENT	SPONSOR DEPARTMENT
CITY ENGINEER	DATE 5/8/96
DIRECTOR OF PUBLIC WORKS AND ENGINEERING	DATE 5/10/96

SUBMITTED:	DESIGNED BY: TIM
SCALE: N/A	DRAWN BY: TIM
DATE: MARCH 1996	SHEET NO. 9 OF 14 SHEETS
SURVEY BY:	
JOB NO: 440-U	CITY DWG. NO.

STORM SEWER DETAILS

STATE OF TEXAS
MICHAEL V. BALDWIN
REGISTERED PROFESSIONAL ENGINEER

PEI
PROVIDENT ENGINEERS, INC.
12200 N.W. FRWY, Suite 210
Houston, Texas 77092