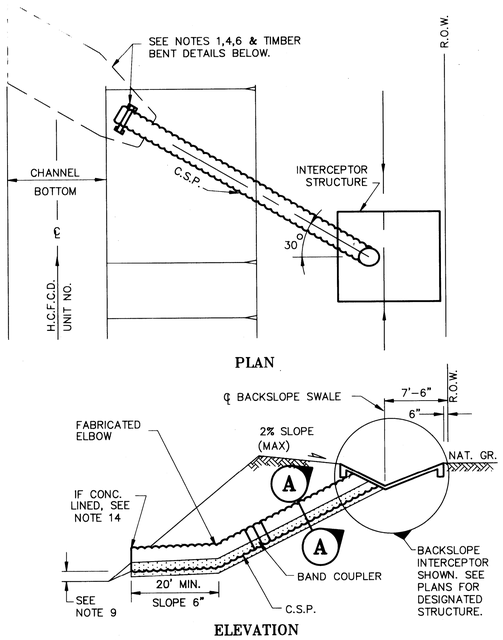

TYPICAL INTERCEPTOR OUTFALL STRUCTURE LAYOUT

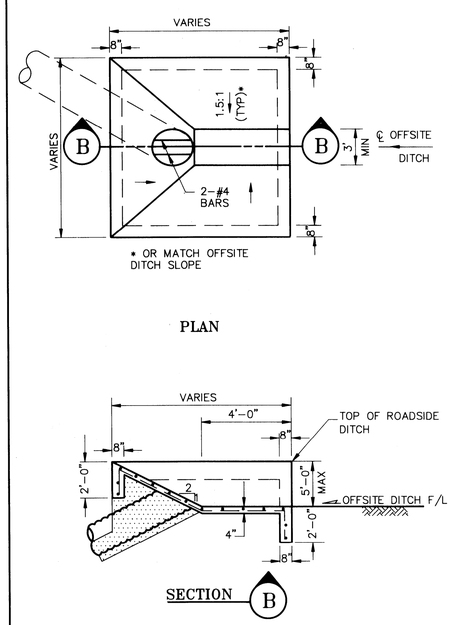

TYPICAL OFFSITE DITCH INTERCEPTOR STRUCTURE

(42" MAX.)

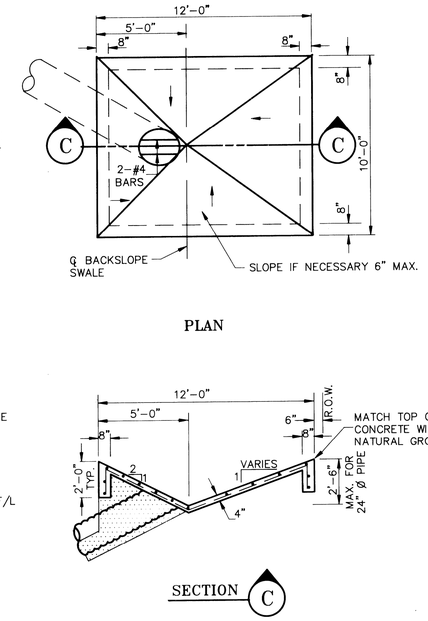

TYPICAL BACKSLOPE INTERCEPTOR STRUCTURE

(24" & 30" DIA. C.S.P. ONLY)

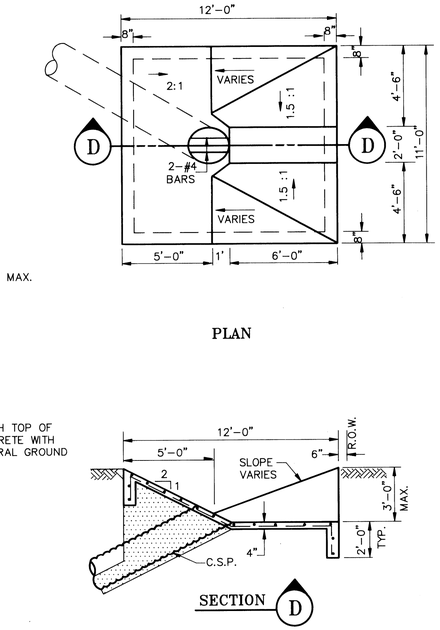

COMBINATION BACKSLOPE AND OFFSITE DITCH INTERCEPTOR

(42" MAX.)

GENERAL NOTES

1. INTERCEPTOR STRUCTURE OUTFALLS ≥ 48" DIAMETER AND ALL STORM SEWER AND TREATMENT PLANT OUTFALLS SHALL BE INSTALLED WITH RIPRAP EROSION PROTECTION, DIMENSIONED AS SHOWN IN "TYPICAL STORM SEWER OUTFALL STRUCTURE LAYOUT."
2. ALL STORM SEWER AND INTERCEPTOR OUTFALL PIPES WITHIN THE HCFCD RIGHT-OF-WAY SHALL BE CORRUGATED STEEL PIPE (CSP) PER HCFCD SPECIFICATION NO. 02610-CORRUGATED STEEL PIPE.
3. CEMENT STABILIZED SAND SHALL BE PROVIDED AND PLACED IN ACCORDANCE WITH HCFCD SPECIFICATION NO. 02242-CEMENT STABILIZED SAND.
4. TIMBER BENTS SHALL BE IN ACCORDANCE WITH HCFCD SPECIFICATION NO.02365-TIMBER BENTS FOR OUTFALL PIPES.
5. ALL EXCAVATION, FILL AND BACKFILL FOR THE INTERCEPTOR STRUCTURES SHALL BE IN ACCORDANCE WITH HCFCD SPECIFICATION NO. 02221-STRUCTURAL EXCAVATION, FILL AND BACKFILL.
6. RIPRAP SHALL BE IN ACCORDANCE WITH HCFCD SPECIFICATION NO. 02273.
7. ALL CONCRETE SHALL HAVE A MINIMUM 3000 psi COMPRESSIVE STRENGTH AT 28 DAYS.
8. ALL INTERCEPTOR STRUCTURES SHALL HAVE:
   a. 2-FEET DEEP X 8-INCH WIDE TOE ALL AROUND THE STRUCTURE.
   b. STEEL REINFORCING- 4 BARS (GRADE 40) AT 12 INCHES C.C., EACH WAY.
9. THE FLOWLINE OF ALL OUTFALL PIPES SHALL BE 1 FOOT ABOVE THE DESIGN CHANNEL FLOWLINE, OR 1 FOOT ABOVE NORMAL WATER SURFACE ELEVATION.
10. SLOPE LAST SEGMENT OF OUTFALL PIPE 6 INCH IN 20 FEET.
11. VOIDS BEYOND THE LIMITS OF THE CONCRETE INTERCEPTOR PAD SHALL BE BACKFILLED WITH CEMENT STABILIZED SAND OR SANDY CLAY MATERIAL COMPACTED TO 95% STANDARD PROCTOR DENSITY.
12. THE INTERCEPTOR STRUCTURES SHOWN CAN BE USED ON PIPE SIZES UP TO AND INCLUDING 42-INCH DIAMETER. LARGER PIPE WILL REQUIRE AN INDIVIDUALLY DESIGNED STRUCTURE.
13. OUTFALL PIPES LARGER THAN 72-INCH DIAMETER SHALL BE INDIVIDUALLY DESIGNED AND DETAILED ON THE PLANS.
14. SEE THE CONCRETE PAVING DETAIL SHEET FOR CSP OUTFALL DETAILS THROUGH CONCRETE PAVING.
15. RCP AND BOX CULVERT OUTFALLS ARE TO BE INDIVIDUALLY DESIGNED AND DETAILED ON THE PLANS.
16. OUTFALL DETAILS SHOWN ARE SUITABLE ON SLOPES UP TO AND INCLUDING 3:1. FLATTER SLOPES WILL REQUIRE AN INDIVIDUALLY DESIGNED STRUCTURE.

REV	DESCRIPTION	DATE	APPR

HARRIS COUNTY
FLOOD CONTROL DISTRICT
9900 NORTHWEST FREEWAY
HOUSTON, TEXAS 77092

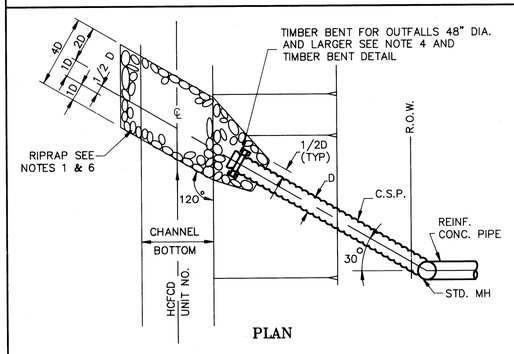

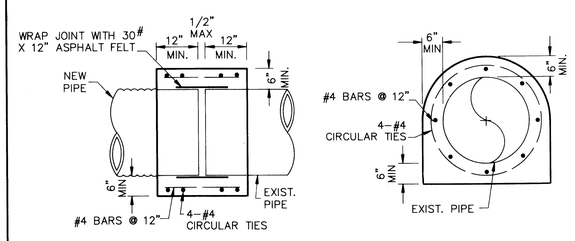

TYPICAL CONCRETE COLLAR DETAIL

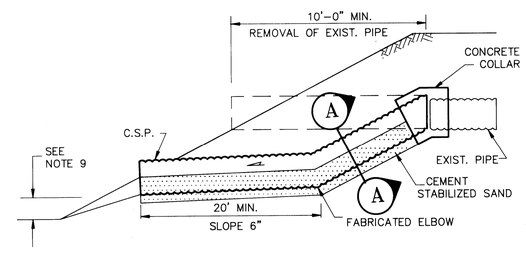

PIPE ADJUSTMENT DETAIL 24-INCH TO 42-INCH DIAMETER

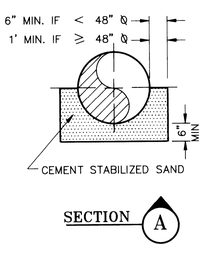

THIS DETAIL SHEET HAS BEEN PREPARED FOR USE ON HCFCD PROJECTS OR PROJECTS TO BE MAINTAINED BY THE HCFCD WHEN COMPLETED BY OTHERS. THE ENGINEER SHOULD CAREFULLY REVIEW THESE DETAILS TO DETERMINE THEIR APPLICABILITY TO A PARTICULAR PROJECT. IF REVISIONS ARE NECESSARY, THEY SHALL BE CLEARLY DELINEATED AND NOTED IN THE REVISION BLOCK IN ACCORDANCE WITH RULE §131.138 OF THE TEXAS STATE BOARD OF REGISTRATION FOR PROFESSIONAL ENGINEERS. AN ENGINEER WHO INCORPORATES THE DETAILS ON THIS SHEET INTO HIS WORK MUST SEAL THIS SHEET AND BECOME RESPONSIBLE FOR ITS USE IN THE END PRODUCT.

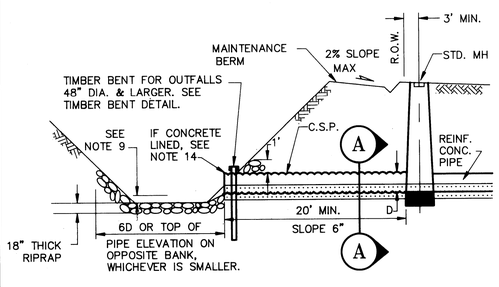

TYPICAL STORM SEWER OUTFALL STRUCTURE LAYOUT

STANDARD\OUTFAL49

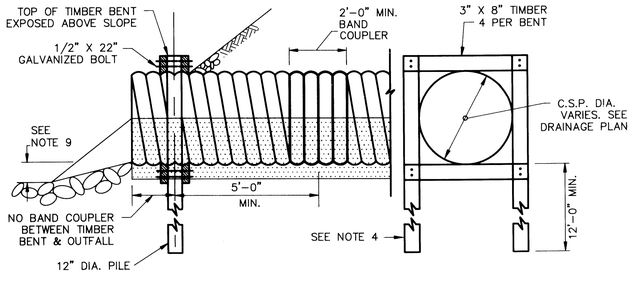

TIMBER BENT DETAIL FOR 48" C.S.P. AND LARGER OUTFALLS

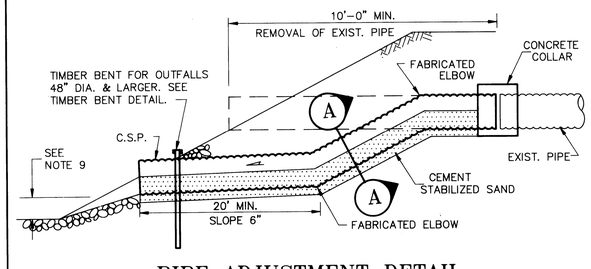

PIPE ADJUSTMENT DETAIL 48-INCH AND LARGER DIAMETER

HCFCD OUTFALL AND INTERCEPTOR STRUCTURE DETAILS

DATE: 8 - 14 - 91

SHEET NUMBER

22 OF 28