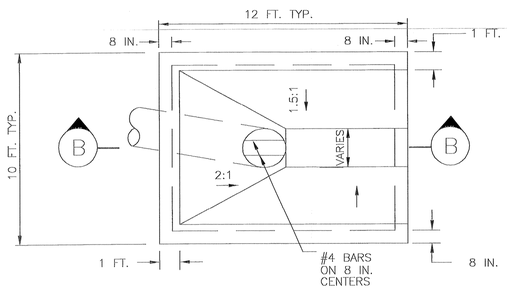

PLAN

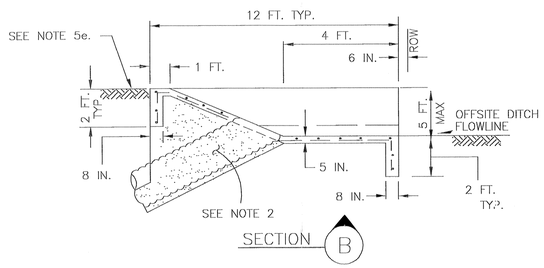

TYPICAL OFFSITE DITCH INTERCEPTOR STRUCTURE

(42 INCH MAX.)

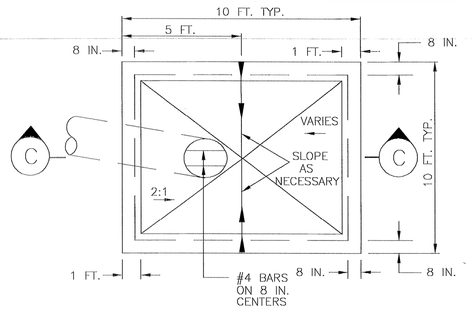

PLAN

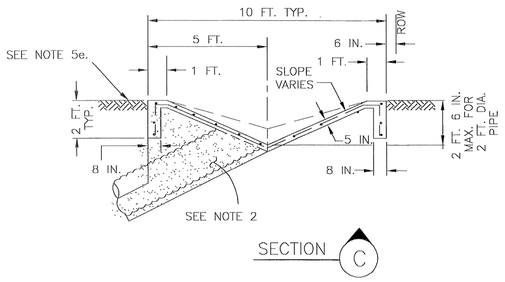

TYPICAL BACKSLOPE INTERCEPTOR STRUCTURE

(24 INCH & 30 INCH ONLY)

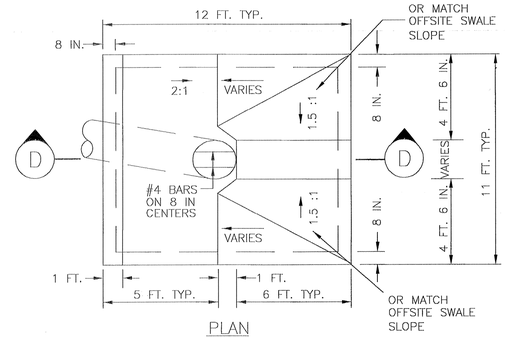

PLAN

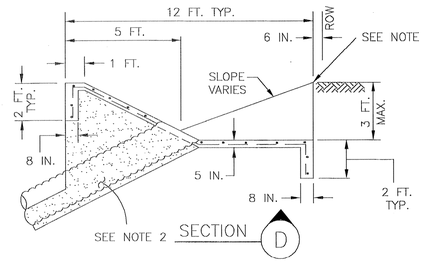

COMBINATION BACKSLOPE AND OFFSITE DITCH INTERCEPTOR

(42 INCH MAX.)

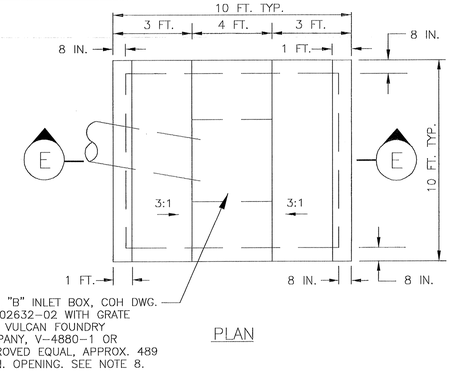

PLAN

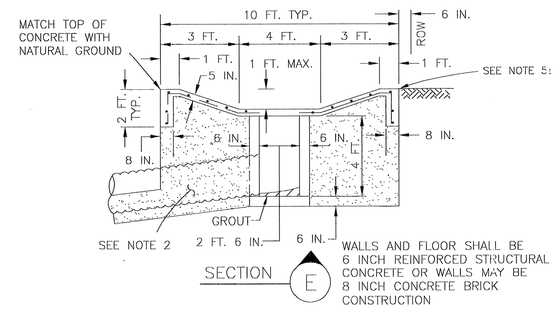

URBAN BACKSLOPE INTERCEPTOR STRUCTURE

(24 INCH ONLY)

INTERCEPTOR STRUCTURE DETAIL NOTES:

1. INTERCEPTOR OUTFALL PIPES WITHIN THE HCFCD RIGHT-OF-WAY SHALL BE CORRUGATED METAL PIPE (CMP) IN ACCORDANCE WITH SPECIFICATION SECTION 02642-CORRUGATED METAL PIPE, HIGH DENSITY POLYETHLENE (HDPE) PIPE IN ACCORDANCE WITH SPECIICATION SECTION 2505-HIGH DENSITY POLYETHYLENE, OR APPROVED EQUAL.
2. PROVIDE AND PLACE CEMENT STABILIZED SAND IN ACCORDANCE WITH SPECIFICATION SECTION 02321-CEMENT STABILIZED SAND.
3. EXCAVATION, FILL AND BACKFILL FOR STORM SEWER OUTFALLS SHALL BE IN ACCORDANCE WITH SPECIFICATION SECTION -02316-STRUCTURAL EXCAVATING AND BACKFILLING.
4. CONCRETE SHALL BE STRUCTURAL CONCRETE IN ACCORDANCE WITH SPECIFICATION SECTION 03310-CONCRETE.
5. INTERCEPTOR STRUCTURES:
   a. ADJUST LENGTH AND WIDTH IN FIELD AS NECESSARY.
   b. 2-FEET DEEP X 8-INCH WIDE TOE ALL AROUND THE STRUCTURE.
   c. STEEL REINFORCING-#4 BARS (GRADE 40) AT 12 INCHES ON CENTER EACH WAY.
   d. ANY INTERCEPTOR OUTFALL PIPE LARGER THAN MAXIMUM SIZE INDICATED REQUIRES A SEPARATE DETAIL.
   e. MATCH TOP OF CONCRETE WITH NATURAL GROUND.
6. SET FLOWLINE OF OUTFALL PIPES 1 FOOT ABOVE CHANNEL FLOWLINE OR 1 FOOT ABOVE NORMAL WATER SURFACE ELEVATION.
7. SEE CONCRETE CHANNEL LINING DETAIL SHEET FOR CMP OR HDPE OUTFALL DETAILS TROUGH CONCRETE CHANNEL LINING.
8. CONCRETE PAD AROUND TYPE "B" INLET: PAID FOR AS CONCRETE INTERCEPTOR STRUCTURE PER UNIT PRICE SCHEDULE.
9. BACKSLOPE SWALE AND INTERCEPTOR STRUCTURE ELEVATIONS AND LOCATIONS SHOWN ON THE PLANS ARE APPROXIMATE. FINAL ELEVATIONS AND LOCATIONS SHALL BE FIELD VERIFIED BY THE ENGINEER PRIOR TO INSTALLATION.
10. MINIMUM TRENCH WIDTH SHALL BE NOT LESS THAN THE GREATER OF WIDTH OF THE PIPE OUTSIDE DIAMETER PLUS 16 IN. OR THE PIPE OUTSIDE DIAMETER TIMES 1.25 PLUS 12 IN. (SEE ASTM D2321)

THIS DETAIL SHEET HAS BEEN PREPARED FOR USE ON HCFCD PROJECTS OR PROJECTS TO BE MAINTAINED BY THE HCFCD WHEN COMPLETED BY OTHERS. AN ENGINEER WHO INCORPORATES THE DETAILS ON THIS SHEET BECOMES RESPONSIBLE FOR ITS USE IN THE END PRODUCT IN ACCORDANCE WITH RULE §137.33 (b) AND (c) OF THE TEXAS STATE BOARD OF REGISTRATION FOR PROFESSIONAL ENGINEERS.

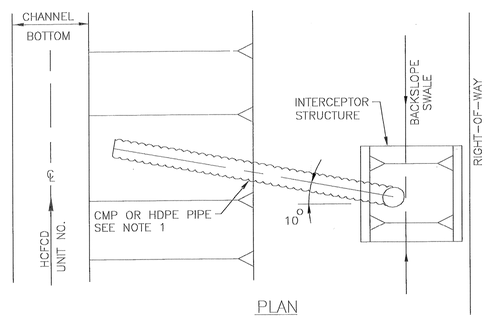

PLAN

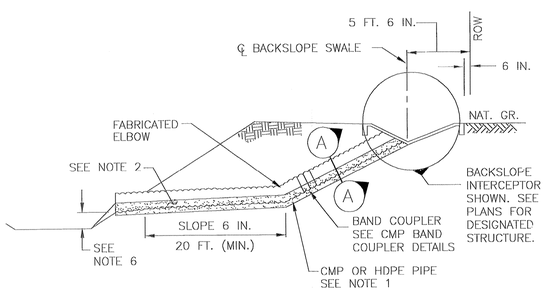

SECTION

TYPICAL INTERCEPTOR OUTFALL STRUCTURE LAYOUT

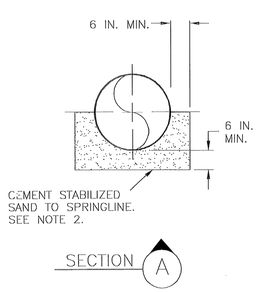

BEDDING FOR CMP

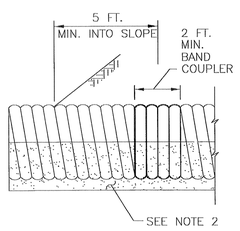

SECTION

CMP BAND COUPLER DETAIL

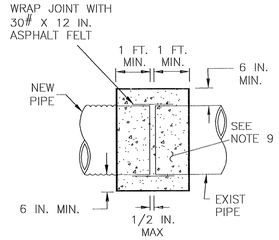

SECTION

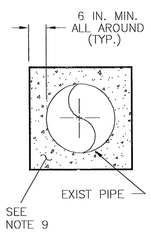

SECTION

TYPICAL CONCRETE COLLAR DETAIL

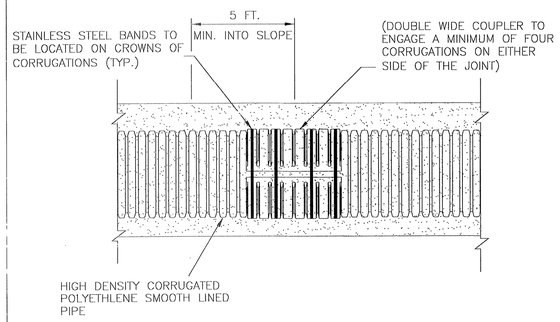

SECTION

HDPE PIPE BAND COUPLER DETAIL

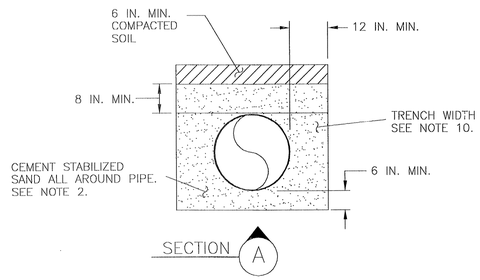

BEDDING FOR HDPE PIPE

P.E. SEAL AND SIGNATURE

PUBLIC WORKS AND ENGINEERING ACCEPTANCE AND FILING 40820 CITY OF HOUSTON, TEXAS

REV	DESCRIPTION	DATE	APPR

PROJECT ID#

VILLAS AT WILLOWBROOK

INTERCEPTOR STRUCTURE DETAILS

PREPARED:

CHECKED:

APPROVED:

STATE OF TEXAS BOBBY K. WILSON 25963 REGISTERED PROFESSIONAL ENGINEER 09-01-05

PCI PROVIDENT CONSULTING, INC. 14141 SOUTHWEST FWY HOUSTON, TEXAS 77098 (713)952-1015

Harris County Flood Control District
9900 Northwest Freeway
Houston, Texas 77092

DATE: 10-5-04
SCALE: NTS

SHEET NUMBER 20 OF 24

STD\INTERCEPTOR STRUCTURE DETAILS