GENERAL NOTES FOR STRUCTURES

CONCRETE

1. DESIGN SHALL CONFORM TO THE LATEST BUILDING CODE REQUIREMENTS FOR STRUCTURAL CONCRETE (ACI–318) WITH SPECIAL REQUIREMENTS OF ENVIRONMENTAL ENGINEERING CONCRETE STRUCTURES (ACI–350)
2. ALL REINFORCING BARS SHALL CONFORM TO ASTM A–615, GRADE 60. ARRANGEMENT AND DETAILS OF REINFORCING STEEL, INCLUDING BAR SUPPORTS AND SPACERS, SHALL BE IN ACCORDANCE WITH THE LATEST ACI DETAILING MANUAL, UNLESS OTHERWISE NOTED.
3. ALL SLAB AND BEAM REINFORCEMENT SHALL HAVE A MINIMUM EXTENSION INTO THE SUPPORT IN ACCORDANCE WITH THE LATEST ACI CODE. IF SUCH EXTENSION IS NOT POSSIBLE, BARS SHALL TERMINATE IN STANDARD HOOKS.
4. HORIZONTAL WALL REINFORCEMENT AND TEMPERATURE REINFORCEMENT SHALL LAP A MINIMUM OF 1.7Ld AT SPLICES. WALL DOWELS AND WALL BAR EXTENSIONS AND ALL STRESS SPLICES SHALL LAP A MINIMUM OF 1.7 Ld, UNLESS OTHERWISE NOTED.
5. WALL OR COLUMNS SHALL HAVE DOWELS FROM FOUNDATIONS OR CONSTRUCTION BELOW OF SAME SIZE AND SPACING AS WALL OR COLUMN VERTICAL STEEL. SEE FOOTING SCHEDULE.
6. UNLESS OTHERWISE NOTED ON THE DRAWINGS, CONCRETE COMPRESSIVE STRENGTH AT 28 DAYS SHALL NOT BE LESS THAN THE FOLLOWING:
   - STRUCTURAL MEMBERS, FOUNDATIONS, WALLS AND SUSPENDED SLABS -- 4000 PSI
   - SLABS ON GRADE ---------- 4000 PSI
   - LEAN CONCRETE CLASS B ---------- 1500 PSI
   - GROUT FILL CLASS H ---------- 3000 PSI
7. UNLESS OTHERWISE SHOWN, THE COVER FOR REINFORCING STEEL SHALL BE AS FOLLOWS:
   - SLABS
     - TOP AND BOTTOM OF FORMED SLABS ---------- 2"
     - TOP OF WALK AND DRIVEWAY SLABS ---------- 2"
     - SURFACES IN CONTACT WITH LIQUID ---------- 2"
     - BOTTOM OF SLABS ON FILL OR SOIL ---------- 3"
   - FOOTINGS:
     - TOP AND SIDES ---------- 2 1/2"
     - BOTTOM ---------- 3"
   - WALLS:
     - LESS THAN 12" THICK ---------- 1 1/2"
     - 12" OR OVER IN THICKNESS WITH POURS LESS THAN 10 FEET HIGH ---------- 2"
     - 12" OR OVER IN THICKNESS WITH POURS MORE THAN 10 FEET HIGH ---------- 2 1/2"
   - BEAMS AND GIRDERS:
     - COVER AT TOP, BOTTOM OR SIDES OF LONGITUDINAL REINF ---------- 2"
   - COLUMNS:
     - COVER FOR VERTICAL BARS ---------- 2"
8. HORIZONTAL AND VERTICAL CONSTRUCTION JOINTS SHOWN OR NOTED ON THE PLANS ARE RECOMMENDED. ANY DEVIATION FROM THOSE SHOWN SHALL HAVE APPROVAL OF THE ENGINEER.
9. ANY STOP IN FRAMED CONCRETE WORK MUST BE MADE IN THE CENTER OF THE SPAN AND INCORPORATE AN APPROVED KEYWAY. REINFORCEMENT SHALL EXTEND THROUGH THESE JOINTS IF REQUIRED FOR CONTINUITY.
10. USE TYPE 'C2' JOINT FOR ALL CONSTRUCTION JOINTS IN WALLS AND SLABS BELOW GRADE AND WALLS WHICH SEPARATE AREAS OF SOIL OR LIQUID FROM PERMANENTLY DRY AREAS SUCH AS TUNNELS, GALLERIES, BASEMENT ROOMS, ETC. USE TYPE 'C1' JOINT AT ALL OTHER CONSTRUCTION JOINTS, UNLESS OTHERWISE NOTED ON DRAWINGS.
11. CONCRETE WALLS AND PARTITIONS SHALL BE POURED IN MAXIMUM LENGTHS OF 40 FEET BETWEEN VERTICAL CONSTRUCTION JOINTS.
12. ALL CONCRETE SLABS OVER 8" IN THICKNESS, REINFORCED WITH BARS, AND POURED AGAINST SOIL SHALL BE POURED IN A STRIP PATTERN OF 40 FEET OR LESS IN EACH DIRECTION.
13. ALL EXPOSED EDGES OF BEAMS, COLUMNS, SLABS AND WALLS SHALL BE CHAMFERED 3/4" UNLESS MASONRY OR OTHER MEMBERS ARE ERECTED FLUSH WITH THEM.
14. REFER TO ARCHITECTURAL, PROCESS, MECHANICAL AND ELECTRICAL DRAWINGS FOR ALL SLEEVES, PIPES, CONDUITS AND MISCELLANEOUS ANCHORING DEVICES TO BE INCORPORATED IN THE CONSTRUCTION

STRUCTURAL STEEL

1. STRUCTURAL STEEL SHALL CONFORM TO THE LATEST AISC "SPECIFICATION FOR THE DESIGN, FABRICATION AND ERECTION OF STRUCTURAL STEEL FOR BUILDINGS". ALL STRUCTURAL STEEL SHALL BE ASTM A36.
2. ELEVATIONS OF STEEL BEAMS SHOWN ON FRAMING PLANS REFER TO TOP OF FLANGE, UNLESS OTHERWISE NOTED.
3. ALL BOLTED CONNECTIONS SHALL BE MADE WITH 3/4" DIAMETER ASTM A–325 BOLTS EXCEPT AS OTHERWISE SHOWN OR NOTED. ALL CONNECTIONS SHALL BE CAPABLE OF SUPPORTING ONE HALF THE MAXIMUM ALLOWABLE UNIFORM LOAD FOR INDICATED BEAM SIZE AND SPAN IN AISC MANUAL OF STEEL CONSTRUCTION, EXCEPT AS OTHERWISE NOTED.
4. FIELD CONNECTIONS SHALL BE BOLTED, EXCEPT AS OTHERWISE SHOWN OR NOTED.
5. ALL WELDING SHALL CONFORM TO THE LATEST SPECIFICATION OF THE AMERICAN WELDING SOCIETY. ALL WELDED CONNECTIONS SHALL BE MADE WITH AWS A5.1 OR A5.5 E70 XX ELECTRODE.
6. ANCHOR BOLTS AND MISC EMBEDDED STEEL ---------- ASTM A36. ANCHOR BOLTS WHICH ARE SUBMERGED, LOCATED ABOVE A LIQUID SURFACE, OR ARE IN A CORROSIVE ATMOSPHERE ---------- 316 SS.
7. ALL EQUIPMENT ANCHOR BOLT DIMENSIONS AND LOCATIONS SHALL BE VERIFIED FROM CERTIFIED VENDOR DRAWINGS, PRIOR TO CONSTRUCTION.

FOUNDATIONS

1. ALLOWABLE SOIL BEARING PRESSURE, EXCAVATION AND BACKFILL FOR FOUNDATIONS AND STRUCTURES SHALL BE AS RECOMMENDED IN THE GEOTECHNICAL REPORT.
2. ALL EXCAVATIONS SHALL BE CARRIED OUT IN THE DRY, AND PROVISIONS SHALL BE MADE TO PREVENT THE BOTTOM OF ALL EXCAVATIONS FROM FREEZING OR FLOODING AT ALL TIMES.
3. ALL FOUNDATIONS SHALL BE CONSTRUCTED IN EXCAVATIONS FREE OF STANDING WATER.
4. BACKFILL MATERIAL, PLACING AND COMPACTION OF BACKFILL SHALL BE IN ACCORDANCE WITH THE DRAWINGS, AND THE CONTRACT SPECIFICATIONS.

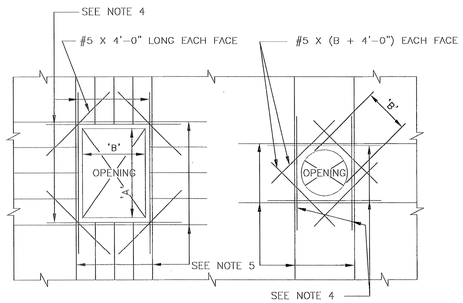

ADDITIONAL REINFORCING STEEL AT OPENINGS IN WALLS AND SLABS

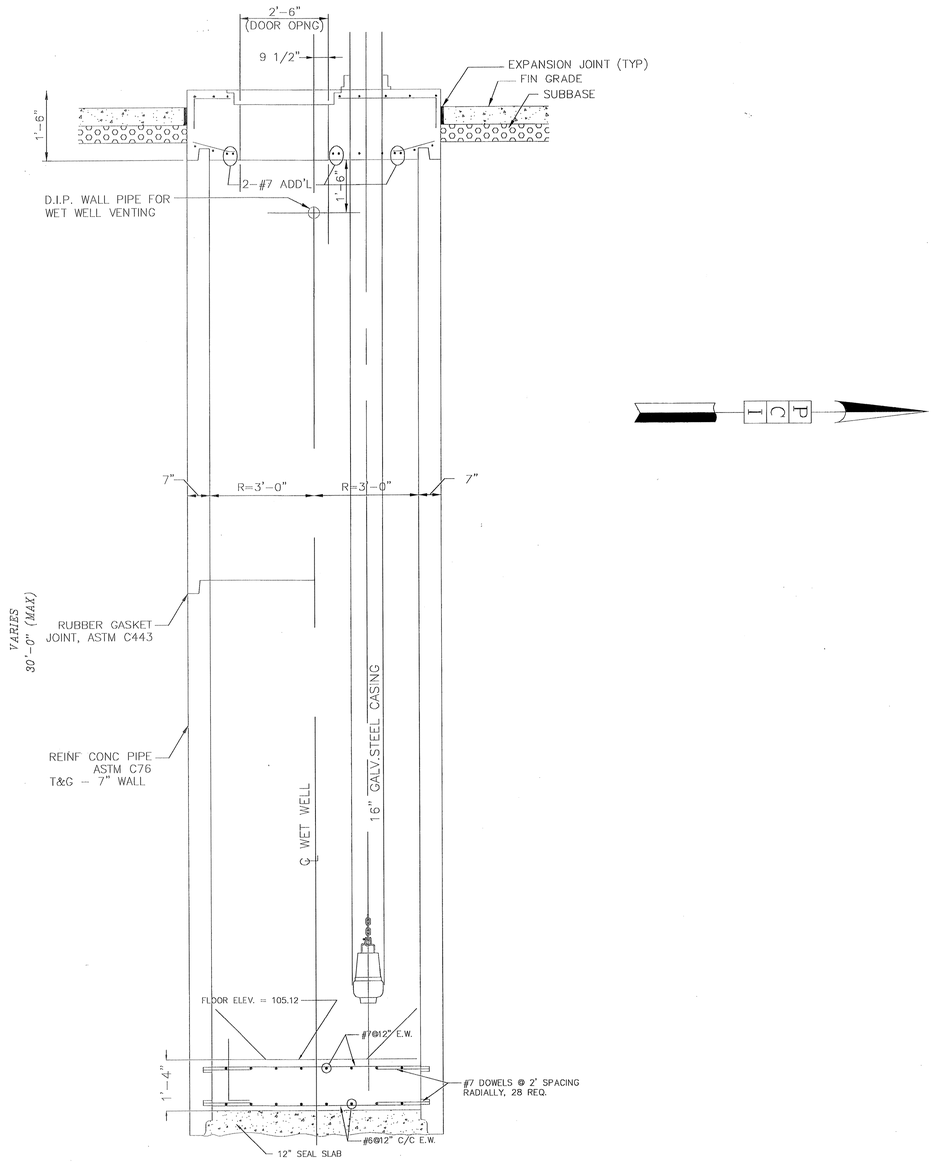

PRECAST CAST–IN PLACE

CAISSON CONSTRUCTION OF WET WELL

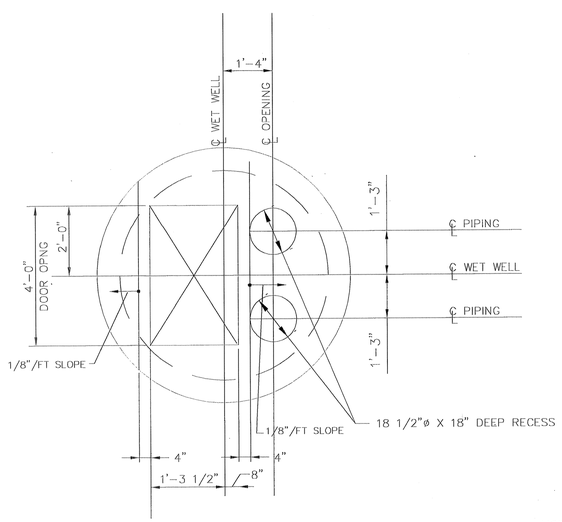

PLAN VIEW @ GRADE

NOTES:

1. CONTRACTOR TO CONFIRM THE SIZE AND LOCATION OF THE ACCESS HATCH OPENINGS ACCORDING TO THE SELECTED HATCH AND PUMP MANUFACTURERS' REQUIREMENTS.
2. SEE DETAIL AND CIVIL DRAWINGS FOR DIMENSIONS AND INFORMATION NOT SHOWN.

BENCH MARK

BENCHMARK: NATIONAL GEODETIC SURVEY MARKER
Y1216, 1973 ADJ., ELEV = 125.994
Y1216, 1978 ADJ., ELEV = 125.406
Y1216, 1988 ADJ., ELEV = 123.94

ELEVATIONS ARE BASED ON 1973 ADJUSTMENT

PCI
PROVIDENT CONSULTING, INC.
1405 ALLSTON ST.
HOUSTON, TEXAS 77008
(713)802–1019

STATE OF TEXAS
BOBBY K. WILSON
25963
REGISTERED
PROFESSIONAL ENGINEER

VILLAS AT WILLOWBROOK
IN
HARRIS COUNTY MUD 191
HARRIS COUNTY, TEXAS

STRUCTURAL DETAILS AND NOTES

WATER	WASTEWATER	TRAFFIC
ST. & BRIDGE	STORMWATER	SWQ
	FACILITIES	

FILE NO:

DRAWING SCALE: AS SHOWN

VERT: HORZ:

SHEET No: 24 OF 24

PUBLIC WORKS AUTHORITY
ACCEPTED AND FILED
40820
CITY SECRETARY NUMBER
HOUSTON, TEXAS